3M | HOME
WATER FILTRATION

Installation and Operating Instructions For

3M™ Whole House Sediment Filtration System

Models: IAS801F / IAS802F

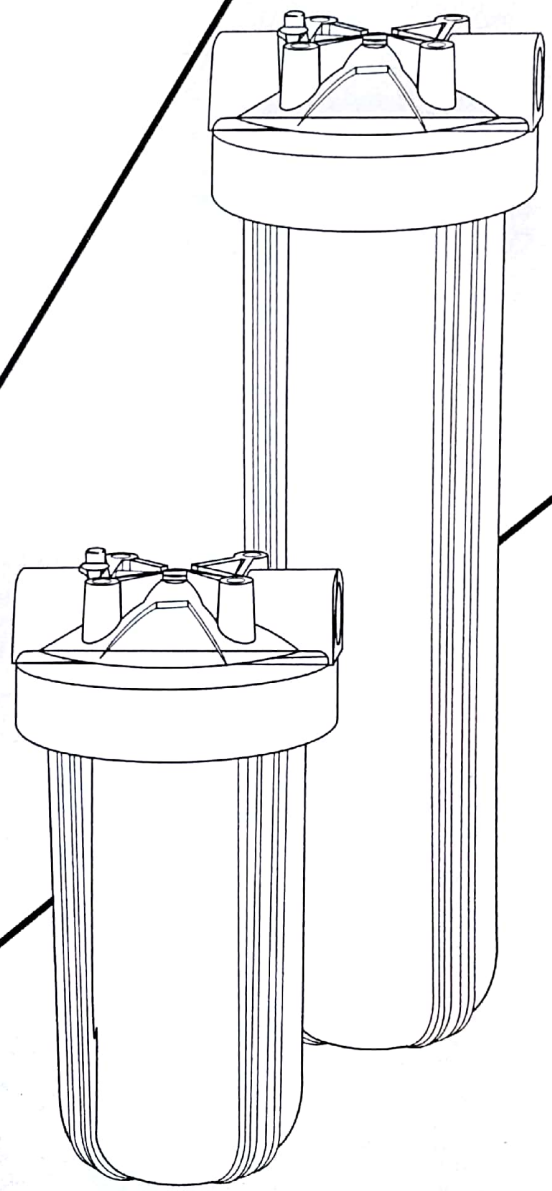

Installer: Please leave manual with homeowner.
Homeowner: For complete information on system operation maintenance under warranty.
Please retain installation and operating manual.

Scanned by CamScanner

LIMITED WARRANTY

3M Electro and Communication Pvt. Ltd. (henceforth referred to as 3M) warrants to the original purchaser-consumer of its Product that it is free of defects in materials and workmanship. Any defect, malfunction, or other failure of this product to conform to this Warranty will be remedied by 3M in the manner provided below.

This Warranty, together with any and all warranties implied by law, shall be limited to one (1) year for the entire product from the date of purchase by the consumer, provided the installation of the product is performed by 3M Authorized personnel, subject to following exclusions and limitations as under:

- This Warranty does not apply for any plastic parts, and is confined to the first purchaser of the product only and if used for personal use only.
- This Warranty does not apply to defects that result from abuse, misuse, alterations or damage not caused by 3M.
- Nominal Visiting Charges are applicable based on purchaser-consumer's location.
- Warranty is valid only on Products sold by 3M Electro and Communication Pvt. Ltd.

IMPORTANT: To file a claim under this warranty the purchaser must complete product registration by calling 3M at 1800-425-425-000 or register on the 3M Website within ten (10) days of installation date.

3M makes no guarantees or warranties, expressed or implied, including, but not limited to, any implied warranty of merchantability of fitness for a particular purpose or implied warranty arising out of a course of dealing, custom, or usage of trade whatsoever with respect to these instructions. 3M shall not under any circumstances be liable to the recipient of these instructions for any direct, indirect, special, incidental, or consequential loss or damages (including, but not limited to, loss of profits, revenue, business, opportunity, or goodwill) resulting from or in any way related to these instructions or the recipient's non-adherence to these instructions, regardless of the legal or equitable theory under which such loss or damages are sought, including breach of warranty or contract, negligence or strict liability.

RESPONSIBILITY OF 3M

3M's obligations under this warranty shall be either to repair, replace, or refund at its sole discretion and on verification of the claim and the product. These obligations are conditioned upon the consumer's making the product available for inspection by 3M or its authorized representative. If any Product covered hereby is actually defective within the terms of this Warranty, then 3M will bear all the reasonable and proper shipping or mailing charges actually incurred (if any) in the consumer's return of the Product set forth herein. If the Product proves not to be defective within the terms of this Warranty, then all costs and expenses in connection with the processing of the consumer's claim hereunder shall be borne by the consumer alone.

RESPONSIBILITY OF THE CONSUMER

Many factors are beyond 3M's control and are uniquely within user's knowledge and control can affect the use and performance of a 3M product in a particular application. Given the variety of factors that can affect the use and performance of a 3M product, user is solely responsible for evaluating the 3M product and determining whether it is fit for a particular purpose and suitable for user's method of application. The original purchaser-consumer's sole responsibility in the instance of a Warranty claim shall be to notify 3M of the defect, malfunction, or other manner with sufficient details in which the terms of this Warranty are violated.

In your communication to 3M to notify any defect, malfunction etc., kindly provide the following details to 3M:

1. Product involved (by model or serial number)
2. Specifying where, when and from whom the Product was purchased.
3. Describing the nature of the defect, malfunction or other violation of this Warranty, by contacting 3M on 1800-425-425-000 or at 3M Electro and Communication Pvt. Ltd, 24, Vittal Mallya Road, UB City, Bangalore - 560001
4. And, making the product available for inspection by 3M or its authorized representative.

3M HOME WATER FILTRATION | 3M ELECTRO & COMMUNICATIONS PVT LTD,
24, Vittal Mallya Road, UB City, Bangalore - 560001

Your Name:

Email ID:

Address:

Serial No.:

Telephone no.

Date of Purchase:

Model #:

Dealer Stamp & Signature

Scanned by CamScanner